AUTOCAD R.14 DRAWING

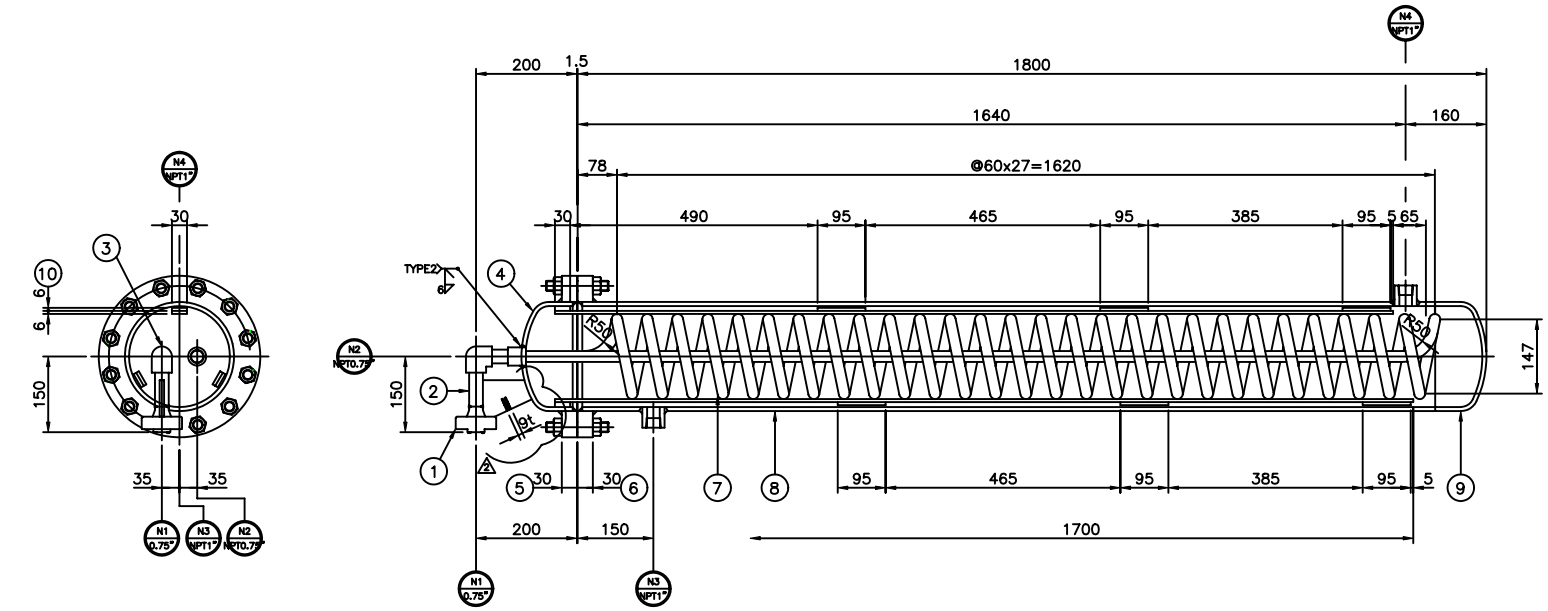

NO.	PART NAME	MATERIAL	Q'TY	WEIGHT(kg) UNIT	WEIGHT(kg) TOTAL	REMARKS
1	IN/OUT FLANGE	A105	2	–	–	0.75" M.S
2	TUBE	A213 Gr.TP304	2	–	–	O.D21.7x4.7t
3	ELBOW	A105	1	–	–	0.75" #3000
4	HEAD	A234 WPB	1	–	–	8"xSch40
5	HEAD FLANGE	A283 Gr.C	1	–	–	30t
6	SHELL FLANGE	A283 Gr.C	1	–	–	30t
7	TUBE	A213 Gr.TP304	1	–	–	O.D21.7x4.7tx15000L
8	SHELL	A106 Gr.B	1	–	–	8"xSch40
9	HEAD	A234 WPB	1	–	–	8"xSch40
10	PLATE	A240	3	–	–	6t

DESIGN & TEST DATA

CODE	ASME SEC.VIII DIV.1(01'ED)/TEMA/KS B 6733		
TYPE	SHELL & TUBE	SHELL SIDE	TUBE SIDE
CAPACITY (M^3)		–	
FLUID CIRCULATED		WATER	CNG
PRESSERE (kg/cm2.G)	DESIGN	5(0.49MPa.G)	305(29.91MPa.G)
	OPERATING	2.5(0.245MPa.G)	253.11(24.821MPa.G)
	HYDRO. TEST	7.5(0.735MPa.G)	382(37.461MPa.G)
	PNEUM. TEST	NO	NO
TEMP.(°C)	DESIGN	75	204
	OPERATING	35/40	170/50
RADIOGRAPHY		NO	NO
POST WELD HEAT TREA.		NO	NO
TYPE OF HEAD		2:1 ELLIP.	NO
JIONT EFFICIENCY	SHELL	100	100
	HEAD	100	NO
CORROSION ALLOWANCE (MM)		1.6	0.0
INSULATION (MM)		NO	NO
WEIGHT (KG)	ERECTION	–	
	OPERATING	–	
	FULL WATER	–	
NO. OF PASS PER SHELL		1	2

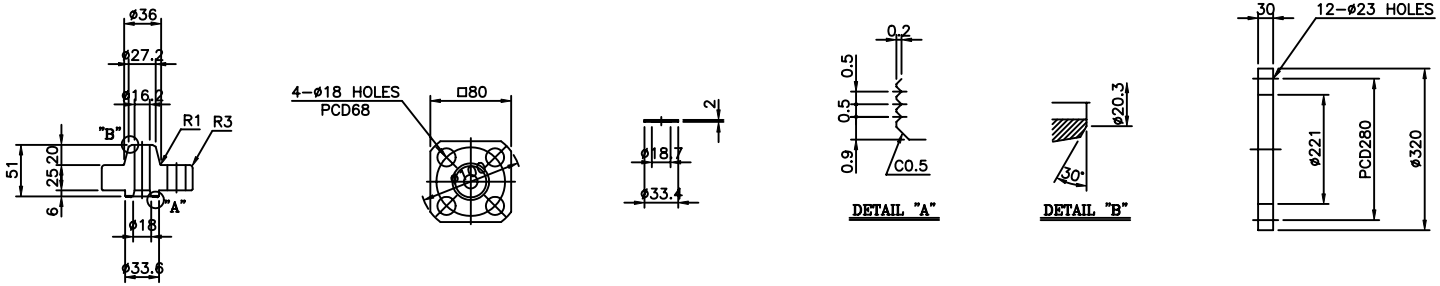

NOTES

1. ALL DIMENSIONS ARE IN MM UNLESS OTHERWISE NOTED.
2. ALL BOLT HOLES SHALL BE STRADDLE NORTH & SOUTH C.L OR NATURAL HORIZON. & VERT. C.L OF EQUIPMENT UNLESS OTHERWISE NOTED.
3. NOZZLE PROJECTIONS ARE FROM CENTER LINE OF VESSEL OR NEAREST TANGENT LINE TO GASKET FACE OF FLANGE.
4. PAINTING SPECIFICATION
   - SURFACE PREPARATION : SSPC-SP-6.
   - OUTSIDE COAT : EPOXY PRIMER 1 COAT (FINISH 2.5G 6/2).
5. ALL WELDING POINTS MT 또는 PT 검사.

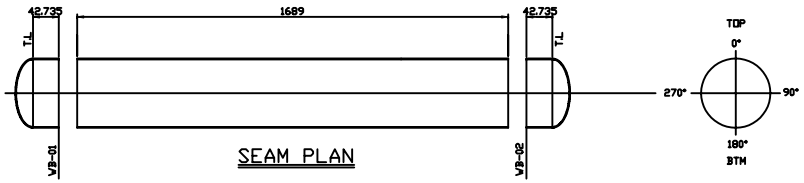

SEAM PLAN

NO. MARK.	REQ'D NO.	NOZZLE SIZE	NOZZLE SCH.	NOZZLE "L"	NOZZLE MATERIAL	FLANGE RATING	FLANGE TYPE*FACE	FLANGE MATERIAL	tx@O.D REINF.PAD	SERVICE & REMARK
N4	1	NPT1"	ø44, SOCKET, A105, #3000							COOLING WATER OUTLET
N3	1	NPT1"	ø44, SOCKET, A105, #3000							COOLING WATER INLET
N2	1	NPT0.75"	ø36, SOCKET, A105, #3000							GAS OUTLET
N1	1	0.75"	S160	150	A213 Gr.TP304	M.S	–	A105	–	GAS INLET

NOZZLE SPECIFICATION

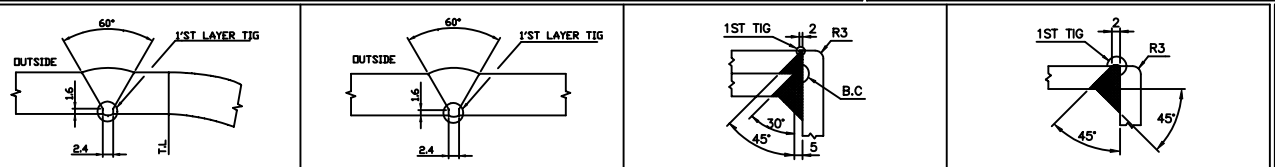

WB-01, WB-02 | WA-01 | TYPE 1 | TYPE 2

REV.	DESCRIPTION OF REVISION	DWG	CHK'D	REV'D	APP'D
2	RIB CHANGE	J.H.CHOI			
1	ISSUE	J.H.CHOI			KIM
0	ISSUE	J.H.CHOI			KIM

Dependable Compressor
KWANGSHIN MACHINE INDUSTRY CO., LTD.

PROJECTION	UNITS	MODEL : HE-104
	INCH	4TH COOLER DRAWING
SHT. NO. 1/1	SCALE 1:10	DWG. NO. HE-104